Sec. 14.4. Tangent planes & linear approximations.

① Tangent planes of smooth surfaces

Smooth curve in 2D

$$y = f(x)$$

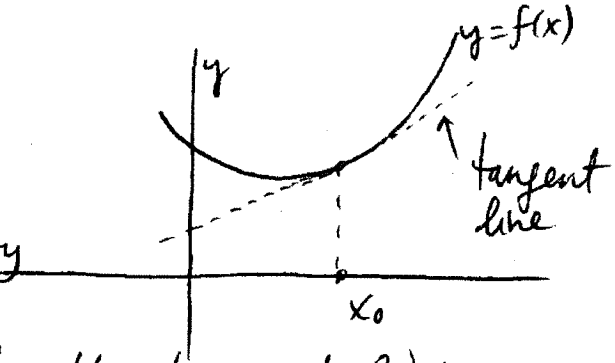

Zoom in on the vicinity of x_0 $\Rightarrow$ $y=f(x)$ becomes very close to the tangent line

$$y_{tan} = f(x_0) + f'(x_0)(x-x_0)$$

(Sec. 3.10).

Smooth surface in 3D

$$z = f(x,y)$$

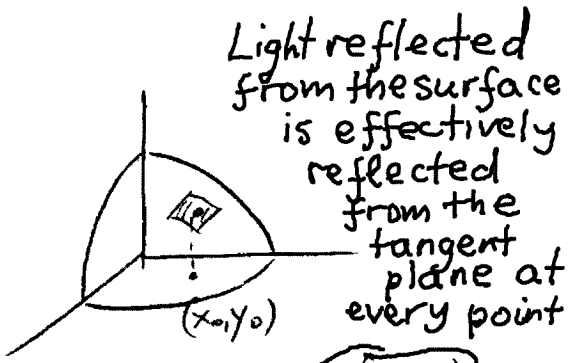

Zoom in on vicinity of (x_0,y_0) $\Rightarrow$ $f(x,y)$ becomes very close to a plane — the tangent plane to $f(x,y)$ at (x_0,y_0,z_0).

Q!

What is the equation of this plane?

Guess:

$$z = \underbrace{f(x_0,y_0)}_{z_0} + f_x(x_0,y_0)(x-x_0) + f_y(x_0,y_0)(y-y_0).$$

This is correct. Let's derive it.

- Any plane through (x_0, y_0, z_0) is:
  $\tilde{a}(x-x_0) + \tilde{b}(y-y_0) + \tilde{c}(z-z_0) = 0$ for some $\tilde{a}, \tilde{b}, \tilde{c}$.
  For a non-vertical plane, $\tilde{c} \neq 0$, so solve for z:
  $z = z_0 + a(x-x_0) + b(y-y_0)$, $a = -\tilde{a}/\tilde{c}$, $b = -\tilde{b}/\tilde{c}$.
- Let's cut the surface with plane $y = y_0$.
  We get a trace $z = f(x, y_0)$ in xz-plane:
- The trace of the tangent plane is the tangent line:

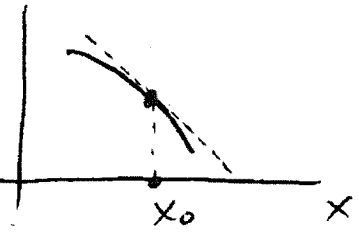

$$z_{\substack{\tan \\ \text{line}}} = f(x_0, y_0) + f_x(x_0, y_0)(x - x_0).$$

Compare this with eq. of tan. plane restricted to $y = y_0$:

$$z_{\substack{\tan \\ \text{plane}}}\Big|_{y=y_0} = z_0 + a(x-x_0) + \underbrace{b(y_0 - y_0)}_{0}$$

So one should have $a = f_x(x_0, y_0)$.

Similarly, by cutting the surface with a plane $x = x_0$, we get

$$b = f_y(x_0, y_0), \quad \text{so}$$

we've proved that

memorize → $$\boxed{z_{\substack{\tan \\ \text{plane}}} = f(x_0, y_0) + f_x(x_0, y_0)(x - x_0) + f_y(x_0, y_0)(y - y_0)}$$

Ex. 1 (see also Ex. 1 in book) Find the tangent plane to $z = \ln(xy)$ at $(2, 1)$.

Sol'n:

$$z_{t.p.} = \underbrace{\ln(x_0 y_0)}_{\ln(2\cdot 1) = \ln 2} + \frac{\partial}{\partial x}\ln(xy)\Big|_{(2,1)}(x-2) + \frac{\partial}{\partial y}\ln(xy)\Big|_{(2,1)}(y-1).$$

$$\frac{\partial}{\partial x}\ln(xy) = \frac{(xy)_x}{(xy)} = \frac{y}{xy} = \frac{1}{x}; \quad @(2,1) \text{ this} = \frac{1}{2}.$$

Similarly $\frac{\partial}{\partial y}\ln(xy) = \frac{1}{y}$; @ $(2,1)$ this $= \frac{1}{1} = 1$.

Thus

$$z_{\substack{\text{t.p.} \\ @(2,1)}} = \ln 2 + \tfrac{1}{2}(x-2) + 1\cdot(y-1).$$

(2) Linearization & linear approximation

We said earlier that the tangent plane @ $(x_0, y_0, z_0) = P$ has the following property:

As you zoom in closer and closer to P, the tan. plane gets almost indistinguishable from the original surface.

In mathematical terms:

As $(x,y) \approx (x_0, y_0)$,

$$f(x,y) \approx f(x_0,y_0) + f_x(x_0,y_0)(x-x_0) + f_y(x_0,y_0)(y-y_0)$$

- $f(x,y)$: original surface — arbitrary (nonlinear) function of x, y.
- $\approx$: gets approximated by
- $f(x_0,y_0) + f_x(x_0,y_0)(x-x_0) + f_y(x_0,y_0)(y-y_0)$: tan. plane ≡ linear approximation ≡ linearization — linear function of x, y.

Ex. 2 Find the linearization (= lin. approximation) of $z = \ln(xy)$ near $(x_0, y_0) = (2,1)$, and check how well it approximates the original function at $(x,y) = (2.1, 1.1)$.

Sol'n:

0) Identify (x_0, y_0) and (x,y) in the above formula.

(x_0, y_0) — the point *near* which we approximate:
$(x_0, y_0) = (2, 1)$.
(x, y) — the point *at* which we find the approximate value:
$(x, y) = (2.1, 1.1)$.

1) Find linearization:

$\ln(xy) \approx$ eq. of tangent plane @ $(2,1)$

(Ex.1) $\Rightarrow \ln 2 + \frac{1}{2}(x-2) + (y-1)$

$(x=2.1, y=1.1) \Rightarrow \ln 2 + \frac{1}{2}(2.1-2) + (1.1-1)$

$= \ln 2 + 0.05 + 0.1 = 0.843\ldots$

2) Check its accuracy:

linearization: $\ln(2.1 \cdot 1.1) \approx 0.843\ldots$

exact: $\ln(2.1 \cdot 1.1) = 0.837\ldots$

$|\text{exact} - \text{linearization}| = 0.006$.

This is *much smaller* than the deviations of (x, y) from (x_0, y_0):

$\Delta x = x - x_0 = 1.1 - 1 = 0.1$
$\Delta y = y - y_0 = 2.1 - 2 = 0.1$
$\gg 0.006$
"much larger".

Value of linearization:

Approximates an *arbitrary* (*complicated*) function by a *simple* *linear* function.

(3) Differential

is essentially the same as linearization or linear approximation.

2D :

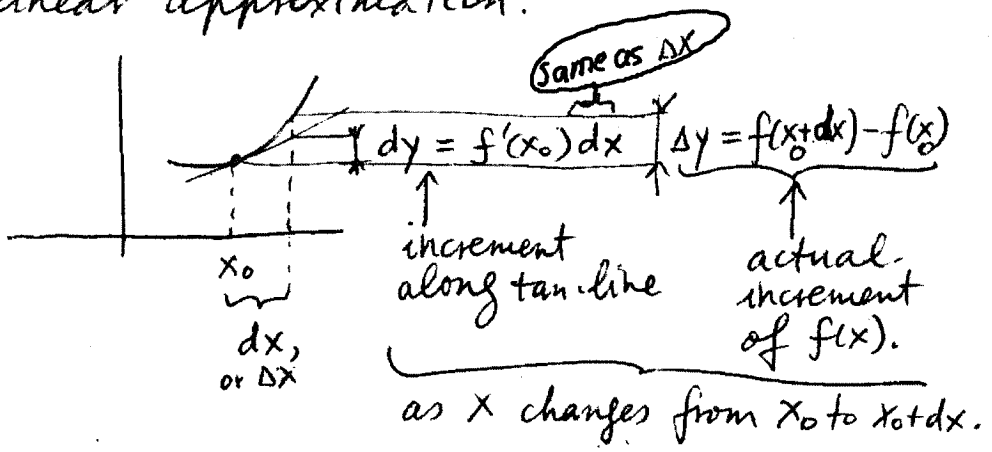

3D

$$\underbrace{\Delta z = f(x_0 + \overbrace{dx}^{\text{same as } \Delta x},\ y_0 + \overbrace{dy}^{=\Delta y}) - f(x_0, y_0)}_{\text{actual increment of } f \text{ when } (x,y) \text{ change from } (x_0,y_0) \text{ to } (x_0+dx,\ y_0+dy).}$$

$$dz = f_x(x_0, y_0)\,dx + f_y(x_0, y_0)\,dy$$

And we know that $\underbrace{\Delta z}_{\text{actual change of } f(x,y)} \approx \underbrace{dz}_{\text{change according to linear approximation.}}$

In summary: • {tangent plane approximation, linear approximation, linearization} all mean the same thing: they approximate a given function.

• The differential is similar, but not the same as they. The differential approximates (THE CHANGE) of a function.

④ Linear approximation from a table.

We know that $f(x,y)$ can be represented by a table of values, and f_x, f_y can be deduced from a table.

Ex. 3 (a) Given 3 values in the table below, recover the 4th by a lin. approximation.
(b) Estimate $f(1.35, 3.46)$ by a lin. approximation.

y \ x	1	2
3	98	101
4	94	(?)

(a) $f(\overset{x,y}{2},4) \approx f(\overset{x_0,y_0}{1,3}) + f_x(\overset{x_0,y_0}{1,3})\cdot(\overset{2-1}{x-x_0}) + f_y(1,3)\cdot(\overset{4-3}{y-y_0})$

$\approx 98 + \frac{101-98}{2-1}\cdot(2-1) + \frac{94-98}{4-3}\cdot(4-3)$

$= 198 + 3 - 4 = 97.$

(b) $f(1.35, 3.46) \approx f(1,3) + f_x(1,3)(1.35-1) + f_y(1,3)(3.46-3)$

$\overset{(a)}{=} 98 + 3\cdot(0.35) - 4\cdot 0.46 = 97.21.$

(See also Ex. 3 in book.)

⑤ Functions of more than 2 variables.

Similarly to above; see Ex. 6 in book.

(6) Applications of the differential

Ex. 4

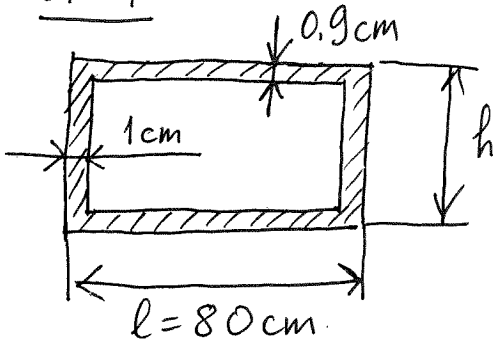

A picture frame has the dimensions as shown.
(a) Use the differentials to estimate the area of the solid (=dashed) part.
(b) Visually interpret the error of this estimate.

Sol'n: 1) Let A be the area of a rectangle with sides x (= length) and y (= height):

$$A(x,y) = x \cdot y.$$

Then the area of the frame is:

$$\Delta A = A(x_0+\Delta x, y_0+\Delta y) - A(x_0,y_0)$$

$$\approx dA = A_x \cdot \Delta x + A_y \cdot \Delta y$$

$$A_x = y, \quad A_y = x, \quad \Rightarrow$$

$$\Delta A \approx y_0 \Delta x + x_0 \Delta y$$

2) In our case, $\Delta x = 2 \cdot 1\,cm = 2\,cm$;
$\Delta y = 2 \cdot 0.9\,cm = 1.8\,cm$.

Should we take $x_0 = l$ or $x_0 = l - \Delta x$?

Answer: Within the accuracy of the linear approximation, it does NOT matter! So, take $x_0 = l$ (easier); and similarly for: $y_0 = h$.

So, $\Delta A \approx h \cdot \Delta x + l \Delta y =$
$= (50 \cdot 2 + 80 \cdot 1.8)\ cm^2 = 244\ cm^2.$

(b)

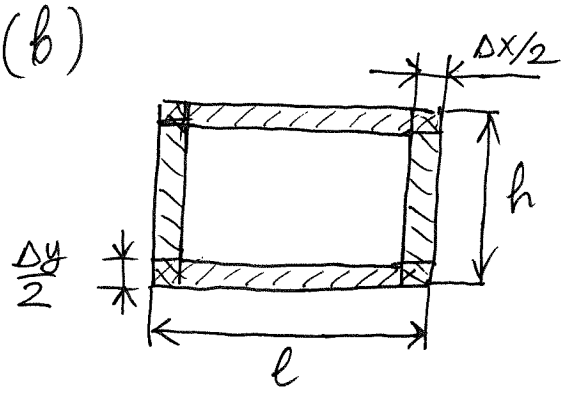

We used:

$$\Delta A \approx 2 \cdot h \cdot \frac{\Delta x}{2} + 2 \cdot l \cdot \frac{\Delta y}{2},$$

thus double-counting the corner rectangles!

Thus, the error is:

$$4 \cdot \frac{\Delta x}{2} \cdot \frac{\Delta y}{2} = \Delta x \cdot \Delta y = 2 \cdot 1.8\ cm^2 = 3.6\ cm^2.$$

Note 1: $3.6\ cm^2$ is much smaller than $244\ cm^2$
↑ error ↑ answer.

Note 2: $dA = d(h \cdot l) = h\,dl + l\,dh$
What Rule does it resemble from Calc. I?

Ex. 5 Differential of $\boxed{f(x,y) = K \cdot x^m \cdot y^n}$,
where K, m, n are some constants.

Let some quantity depends on x, y as above:

$$f(x,y) = K \cdot x^m \cdot y^n.$$

(a) Suppose x increases by $a\%$ and y decreases by $b\%$. Use the differential

to estimate the relative (a.k.a. percent) change in f.

(b) Suppose one measures $x = x_0$ with error (relative) of $a\%$ and measures $y = y_0$ with error $b\%$. What is the maximum percentage error of f (using the differential)?

Sol'n: (a) Given:

$$\frac{\Delta x}{x_0} = a\%, \quad \frac{\Delta y}{y_0} = -b\%$$

↑ y decreased!

Find: $\frac{\Delta f}{f_0}$

Note: Δf = change in f;
$\Delta f / f_0$ = relative change in f.

$$\Delta f \approx df = f_x(x_0, y_0) \cdot \Delta x + f_y(x_0, y_0)\,\Delta y$$

$$= k \cdot m x_0^{m-1} \cdot y_0^{n} \cdot \Delta x + k \cdot x_0^{m} \cdot n y_0^{n-1} \cdot \Delta y$$

$$= k x_0^{m} y_0^{n} \left(m x_0^{-1} \Delta x + n \cdot y_0^{-1} \Delta y \right)$$

$$= f_0 \cdot \left(m \frac{\Delta x}{x_0} + n \cdot \frac{\Delta y}{y_0} \right) = f_0 \left(m \cdot a\% + n \cdot (-b\%) \right).$$

($\frac{\Delta x}{x_0}$: given; $\frac{\Delta y}{y_0}$: given)

Thus,

$$\boxed{\frac{\Delta f}{f_0} \approx m\,a\% + n \cdot (-b\%).}$$

✓

For (b), the situation is more complicated.

(b) Before we write "Given/Find", let's discuss the concept of error.

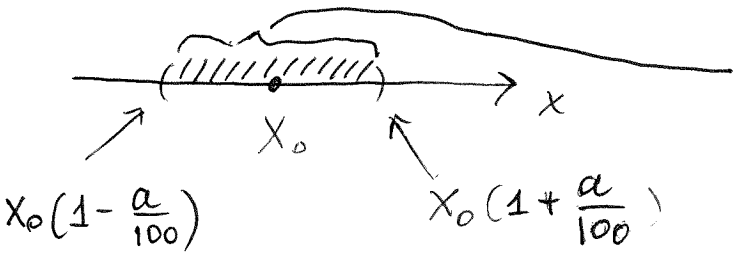

Value of x that one measures with error a% can be anywhere in this interval.

Therefore:

Given:

max. relative (= max. percent) error in x

$$\max\left|\frac{\Delta x}{x_0}\right| = a\%, \quad \max\left|\frac{\Delta y}{y_0}\right| = b\%$$

↖ abs. value.

(Note: the error cannot be negative! It's ≥ 0 by definition, because it refer to the max. magnitude of the deviation from x_0.)

Find: $\max\left|\Delta f/f_0\right|$. ← max. percent error in f.

So: Since we found that

$$\Delta f \approx f_0\left(m\frac{\Delta x}{x_0} + n\frac{\Delta y}{y_0}\right), \Rightarrow$$

$$\left|\frac{\Delta f}{f_0}\right| \approx \left|m\frac{\Delta x}{x_0} + n\cdot\frac{\Delta y}{y_0}\right|$$

$$\max\left|\frac{\Delta f}{f_0}\right| = \max\left|m\cdot\frac{\Delta x}{x_0} + n\frac{\Delta y}{y_0}\right|$$

$$= \max\left|m\cdot\frac{\Delta x}{x_0}\right| + \max\left|n\cdot\frac{\Delta y}{y_0}\right|.$$

Note: The presence of "max" is critical for this formula!

Example: If $-2 \le y \le 2$, find $\max|3+y|$.

Answer: $\max|3+y| = \cancelto{3}{\max|3|} + \cancelto{2}{\max|y|}$
$= 3+2.$

Similarly, $\underbrace{\max|-3+y|}_{\max|\underbrace{-3+(-2)}_{-5}|} = \cancelto{3}{\max|-3|} + \cancelto{2}{\max|y|}$
$= 5.$

Returning to our problem:

$$\boxed{\max\left|\frac{\Delta f}{f_0}\right|} = |m|\cdot\max\left|\frac{\Delta x}{x_0}\right| + |n|\cdot\max\left|\frac{\Delta y}{y_0}\right|$$

$$\boxed{= |m|\,a\% + |n|\,b\%}$$ ← all terms are ≥ 0!

Only for $f(x,y) = k\cdot x^m\cdot y^n$

Note: The error can only add (nominally). They can subtract only by chance, but one can never know if they did (for otherwise it is no longer an error).

Illustration to Ex.5 The volume of a circular cylinder is: $V = \pi r^2 h$. One measures r and h with 4% and 3% errors, respectively. What is the relative error of finding V?

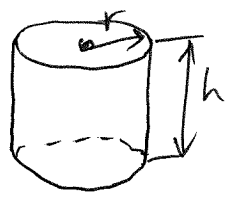

According to the above formula (where $m=2$, $n=1$), $\max\left|\frac{\Delta V}{V_0}\right| = |2|\cdot 4\% + |1|\cdot 3\% = 11\%$.