Sec. 14.4. Tangent planes & linear approximations.

① Tangent planes of smooth surfaces

Smooth curve in 2D

$$y = f(x)$$

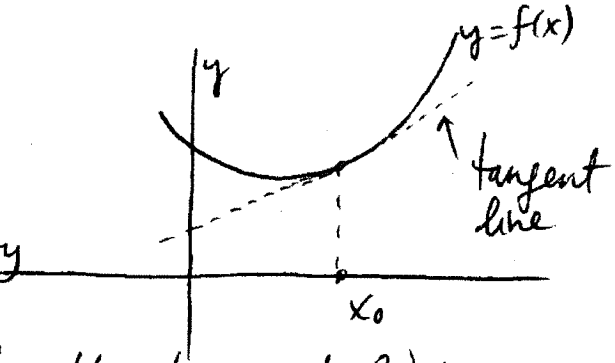

Zoom in on the vicinity of x_0 $\Rightarrow$ $y = f(x)$ becomes very close to the tangent line

$$y_{tan} = f(x_0) + f'(x_0)(x - x_0)$$

(Sec. 3.10).

Smooth surface in 3D

$$z = f(x, y)$$

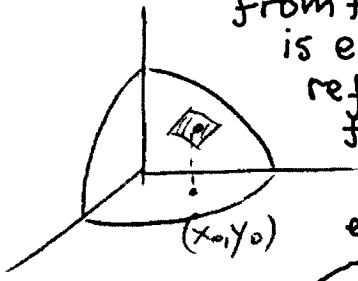

Light reflected from the surface is effectively reflected from the tangent plane at every point

Zoom in on vicinity of (x_0, y_0) $\Rightarrow$ $f(x,y)$ becomes very close to a plane — the tangent plane to $z = f(x,y)$ at (x_0, y_0, z_0).

$f(x_0, y_0)$

Q:

What is the equation of this plane?

Guess:

$$z = \underbrace{f(x_0, y_0)}_{z_0} + f_x(x_0, y_0)(x - x_0) + f_y(x_0, y_0)(y - y_0).$$

This is correct. Let's derive it.

- Any plane through (x_0, y_0, z_0) is:
  $\tilde{a}(x-x_0) + \tilde{b}(y-y_0) + \tilde{c}(z-z_0) = 0$ for some $\tilde{a}, \tilde{b}, \tilde{c}$.
  For a non-vertical plane, $\tilde{c} \neq 0$, so solve for z:
  $z = z_0 + a(x-x_0) + b(y-y_0)$, $a = -\tilde{a}/\tilde{c}$, $b = -\tilde{b}/\tilde{c}$.
- Let's cut the surface with plane $y = y_0$.
  We get a trace $z = f(x, y_0)$ in xz-plane:
- The trace of the tangent plane is the tangent line:

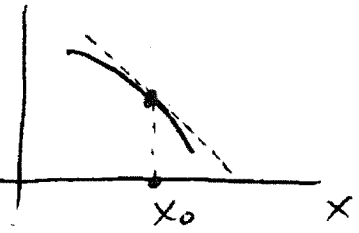

$$z_{\substack{\tan \\ \text{line}}} = f(x_0, y_0) + f_x(x_0, y_0)(x-x_0).$$

Compare this with eq. of tan. plane restricted to $y=y_0$:

$$z_{\substack{\tan \\ \text{plane}}}\Big|_{y=y_0} = z_0 + a(x-x_0) + \underbrace{b(y_0-y_0)}_{0}$$

So one should have $a = f_x(x_0, y_0)$.

Similarly, by cutting the surface with a plane $x=x_0$, we get

$$b = f_y(x_0, y_0), \quad \text{so}$$

we've proved that

memorize →
$$\boxed{z_{\substack{\tan \\ \text{plane}}} = f(x_0, y_0) + f_x(x_0, y_0)(x-x_0) + f_y(x_0, y_0)(y-y_0)}$$

Ex. 1 (see also Ex. 1 in book) Find the tangent plane to $z = \ln(xy)$ at $(2,1)$.

Sol'n:

$$z_{t.p.} = \underbrace{\ln(x_0 y_0)}_{\ln(2\cdot 1) = \ln 2} + \frac{\partial}{\partial x}\ln(xy)\Big|_{(2,1)}(x-2) + \frac{\partial}{\partial y}\ln(xy)\Big|_{(2,1)}(y-1).$$

$\frac{\partial}{\partial x}\ln(xy) = \frac{(xy)_x}{(xy)} = \frac{y}{xy} = \frac{1}{x}$; @(2,1) this $= \frac{1}{2}$.

Similarly $\frac{\partial}{\partial y}\ln(xy) = \frac{1}{y}$; @ (2,1) this $= \frac{1}{1} = 1$.

Thus

$$z_{\substack{\text{t.p.} \\ @(2,1)}} = \ln 2 + \tfrac{1}{2}(x-2) + 1\cdot(y-1).$$

(2) Linearization & linear approximation

We said earlier that the tangent plane @ (x_0, y_0, z_0) has the following property:

As you zoom in closer and closer to P, the tan. plane gets almost indistinguishable from the original surface.

In mathematical terms:

As $(x,y) \approx (x_0, y_0)$,

$$f(x,y) \approx f(x_0,y_0) + f_x(x_0,y_0)(x-x_0) + f_y(x_0,y_0)(y-y_0)$$

- $f(x,y)$: original surface — arbitrary (nonlinear) function of x, y.
- $\approx$: gets approximated by
- $f(x_0,y_0) + f_x(x_0,y_0)(x-x_0) + f_y(x_0,y_0)(y-y_0)$: tan. plane ≡ linear approximation ≡ linearization — linear function of x, y.

Ex. 2 Find the linearization (= lin. approximation) of $z = \ln(xy)$ near $(x_0, y_0) = (2,1)$, and check how well it approximates the original function at $(x,y) = (2.1, 1.1)$.

Sol'n:

0) Identify (x_0, y_0) and (x,y) in the above formula.

(x_0, y_0) — the point *near* which we approximate:
$(x_0, y_0) = (2, 1)$.
(x, y) — the point *at* which we find the approximate value:
$(x, y) = (2.1, 1.1)$.

1) Find linearization:

$\ln(xy) \approx$ eq. of tangent plane @ $(2,1)$

(Ex.1) $\Rightarrow \ln 2 + \frac{1}{2}(x-2) + (y-1)$

$(x=2.1, y=1.1) \Rightarrow \ln 2 + \frac{1}{2}(2.1-2) + (1.1-1)$

$= \ln 2 + 0.05 + 0.1 = 0.843\ldots$

2) Check its accuracy:

linearization: $\ln(2.1 \cdot 1.1) \approx 0.843\ldots$

exact: $\ln(2.1 \cdot 1.1) = 0.837\ldots$

$|\text{exact} - \text{linearization}| = 0.006$.

This is *much smaller* than the deviations of (x, y) from (x_0, y_0):

$\Delta x = x - x_0 = 1.1 - 1 = 0.1$
$\Delta y = y - y_0 = 2.1 - 2 = 0.1$
$\gg 0.006$
"much larger".

Value of linearization:

Approximates an *arbitrary* (*complicated*) function by a *simple* *linear* function.

(3) Differential

is essentially the same as linearization or linear approximation.

2D :

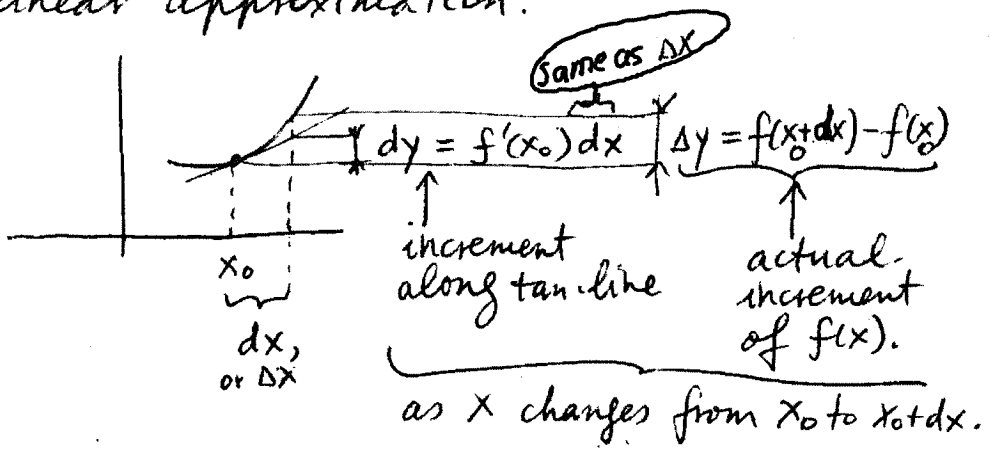

3D

$$\underbrace{\Delta z = f(x_0 + \overbrace{dx}^{\text{same as } \Delta x},\ y_0 + \overbrace{dy}^{=\Delta y}) - f(x_0, y_0)}_{\text{actual increment of } f \text{ when } (x,y) \text{ change from } (x_0,y_0) \text{ to } (x_0+dx,\ y_0+dy).}$$

$$dz = f_x(x_0, y_0)\,dx + f_y(x_0, y_0)\,dy$$

And we know that $\underbrace{\Delta z}_{\text{actual change of } f(x,y)} \approx \underbrace{dz}_{\text{change according to linear approximation.}}$

In summary: • {tangent plane approximation, linear approximation, linearization} all mean the same thing: they approximate a given function.

• The differential is similar, but not the same as they. The differential approximates THE CHANGE of a function.

④ Linear approximation from a table.

We know that $f(x,y)$ can be represented by a table of values, and f_x, f_y can be deduced from a table.

Ex. 3 (a) Given 3 values in the table below, recover the 4th by a lin. approximation.
(b) Estimate $f(1.35, 3.46)$ by a lin. approximation.

y \ x	1	2
3	98	101
4	94	(?)

(a) $f(\overset{x,y}{2,4}) \approx f(\overset{x_0,y_0}{1,3}) + f_x(\overset{x_0,y_0}{1,3})\cdot(\overset{2-1}{x-x_0}) + f_y(1,3)\cdot(\overset{4-3}{y-y_0})$

$\approx 98 + \frac{101-98}{2-1}\cdot(2-1) + \frac{94-98}{4-3}\cdot(4-3)$

$= 198 + 3 - 4 = 97.$

(b) $f(1.35, 3.46) \approx f(1,3) + f_x(1,3)(1.35-1) + f_y(1,3)(3.46-3)$

$\overset{(a)}{=} 98 + 3\cdot(0.35) - 4\cdot 0.46 = 97.21.$

(See also Ex. 3 in book.)

⑤ Functions of more than 2 variables.

Similarly to above; see Ex. 6 in book.

(6) Applications of the differential

Ex. 4

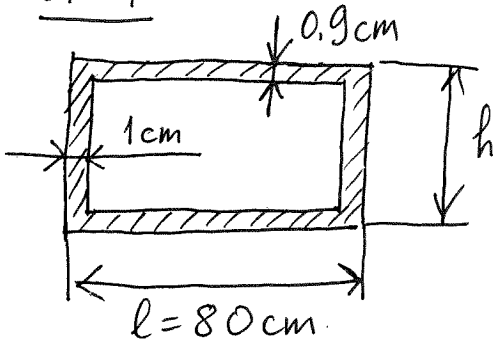

A picture frame has the dimensions as shown.
(a) Use the differentials to estimate the area of the solid (=dashed) part.
(b) Visually interpret the error of this estimate.

Sol'n: 1) Let A be the area of a rectangle with sides x (= length) and y (= height):

$$A(x,y) = x \cdot y.$$

Then the area of the frame is:

$$\Delta A = A(x_0+\Delta x, y_0+\Delta y) - A(x_0,y_0)$$

$$\approx dA = A_x \cdot \Delta x + A_y \cdot \Delta y$$

$$A_x = y, \quad A_y = x, \quad \Rightarrow$$

$$\Delta A \approx y_0 \Delta x + x_0 \Delta y$$

2) In our case, $\Delta x = 2 \cdot 1\,cm = 2\,cm$;
$\Delta y = 2 \cdot 0.9\,cm = 1.8\,cm$.

Should we take $x_0 = l$ or $x_0 = l - \Delta x$?

Answer: Within the accuracy of the linear approximation, it does NOT matter! So, take $x_0 = l$ (easier); and similarly for: $y_0 = h$.

So, $\Delta A \approx h \cdot \Delta x + l \Delta y =$
$= (50 \cdot 2 + 80 \cdot 1.8)\ cm^2 = 244\ cm^2.$

(b)

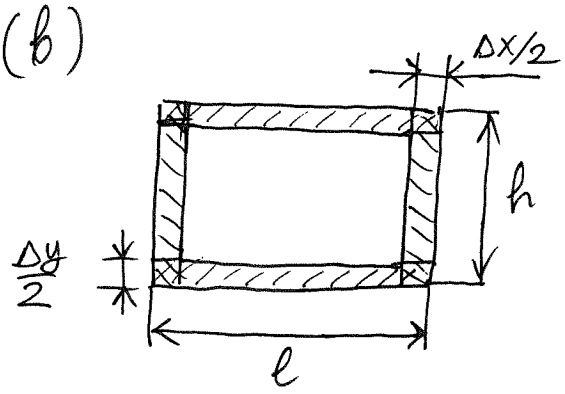

We used:

$$\Delta A \approx 2 \cdot h \cdot \frac{\Delta x}{2} + 2 \cdot l \cdot \frac{\Delta y}{2},$$

thus double-counting the corner rectangles!

Thus, the error is:

$$4 \cdot \frac{\Delta x}{2} \cdot \frac{\Delta y}{2} = \Delta x \cdot \Delta y = 2 \cdot 1.8\ cm^2 = 3.6\ cm^2.$$

Note 1: $3.6\ cm^2$ (↑ error) is much smaller than $244\ cm^2$ (↑ answer).

Note 2: $dA = d(h \cdot l) = h\,dl + l\,dh$

What Rule does it resemble from Calc. I?

You will be TESTED on this.

Ex. 5 Differential of $\boxed{f(x,y) = K \cdot x^m \cdot y^n}$, where K, m, n are some constants.

Let some quantity depends on x, y as above:

$$f(x,y) = K \cdot x^m \cdot y^n.$$

(a) Suppose x increases by $a\%$ and y decreases by $b\%$. Use the differential

to estimate the relative (a.k.a. percent) change in f.

(b) Suppose one measures $x = x_0$ with error (relative) of $a\%$ and measures $y = y_0$ with error $b\%$. What is the maximum percentage error of f (using the differential)?

Sol'n: (a) Given:

$$\frac{\Delta x}{x_0} = a\%, \quad \frac{\Delta y}{y_0} = \ominus b\%$$

↑ y decreased!

Find: $\frac{\Delta f}{f_0}$

Note: Δf = change in f;
$\Delta f / f_0$ = relative change in f.

$$\Delta f \approx df = f_x(x_0, y_0) \cdot \Delta x + f_y(x_0, y_0)\, \Delta y$$

$$= k \cdot m x_0^{m-1} \cdot y_0^{n} \cdot \Delta x + k \cdot x_0^{m} \cdot n y_0^{n-1} \cdot \Delta y$$

$$= k x_0^{m} y_0^{n} \left(m x_0^{-1} \Delta x + n \cdot y_0^{-1} \Delta y \right)$$

$$= f_0 \cdot \left(m \frac{\Delta x}{x_0} + n \cdot \frac{\Delta y}{y_0} \right) = f_0 \left(m \cdot a\% + n \cdot (-b\%) \right).$$

($\frac{\Delta x}{x_0}$: given; $\frac{\Delta y}{y_0}$: given)

Thus,

$$\boxed{\frac{\Delta f}{f_0} \approx m\, a\% + n \cdot (-b\%).}$$

Don't have to memorize, BUT MUST KNOW HOW TO USE IT. YOU HAVE SEVERAL HW PROBLEMS ON THIS FORMULA.

For (b), the situation is more complicated.

(b) Before we write "Given/Find", let's discuss the concept of error.

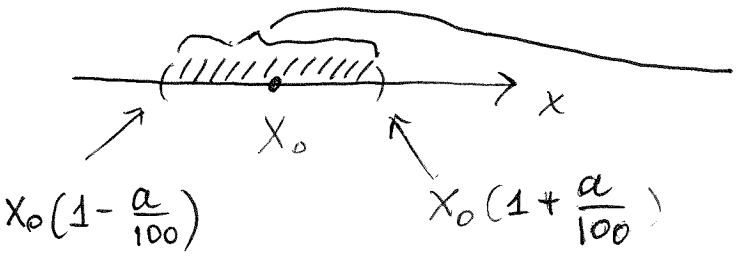

Value of x that one measures with error a% can be anywhere in this interval.

Therefore:

Given:

max. relative (= max. percent) error in x

$$\max\left|\frac{\Delta x}{x_0}\right| = a\%, \quad \max\left|\frac{\Delta y}{y_0}\right| = b\%$$

↖ abs. value.

(Note: the error cannot be negative! It's ≥ 0 by definition, because it refers to the max. magnitude of the deviation from x_0.)

Find: $\max\left|\Delta f/f_0\right|$. ← max. percent error in f.

So: Since we found that (see previous page)

$$\Delta f \approx f_0\left(m\frac{\Delta x}{x_0} + n\frac{\Delta y}{y_0}\right), \Rightarrow$$

$$\left|\frac{\Delta f}{f_0}\right| \approx \left|m\frac{\Delta x}{x_0} + n\cdot\frac{\Delta y}{y_0}\right|$$

$$\max\left|\frac{\Delta f}{f_0}\right| = \max\left|m\cdot\frac{\Delta x}{x_0} + n\frac{\Delta y}{y_0}\right|$$

This step is explained on the next page.

$$= \max\left|m\cdot\frac{\Delta x}{x_0}\right| + \max\left|n\cdot\frac{\Delta y}{y_0}\right|.$$

Note: The presence of "max" is critical for this formula!

Example: If $-2 \le y \le 2$, find $\max|3+y|$.

Answer: $\max|3+y| = \cancelto{3}{\max|3|} + \cancelto{2}{\max|y|}$
$= 3+2.$

Similarly, $\underbrace{\max|-3+y|}_{\text{which is}} = \cancelto{3}{\max|-3|} + \cancelto{2}{\max|y|}$

$\max|\underbrace{-3+(-2)}_{-5}| = 5.$

Again: The formulas from this Example are valid only for this function.

Returning to our problem:

always > 0   always (+)   always > 0

$$\max\left|\frac{\Delta f}{f_0}\right| = |m|\cdot\max\left|\frac{\Delta x}{x_0}\right| + |n|\cdot\max\left|\frac{\Delta y}{y_0}\right|$$

$$= |m|\,a\% + |n|\,b\%$$ ← all terms are ≥ 0!

Only for $f(x,y) = K\cdot x^m\cdot y^n$

Note: The errors can only add (nominally). They can subtract only by chance, but one can never know if they did (for otherwise it is no longer an error).

A quick Illustration to Ex.5

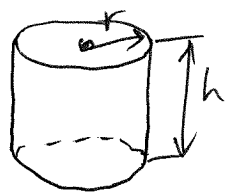

The volume of a circular cylinder is: $V = \pi r^2 h$. One measures r and h with 4% and 3% errors, respectively. What is the relative error of finding V?

According to the above formula (where $m=2$, $n=1$), $\max\left|\frac{\Delta V}{V_0}\right| = |2|\cdot 4\% + |1|\cdot 3\% = 11\%$.

(Many more problems are in the HW for 14.4.)